AIP CONFERENCE PROCEEDINGS 208

CURRENT TOPICS IN SHOCK WAVES

17th INTERNATIONAL SYMPOSIUM ON SHOCK WAVES & SHOCK TUBES

BETHLEHEM, PA 1989

EDITOR:

YONG W. KIM
LEHIGH UNIVERSITY

AIP

American Institute of Physics New York

FOCUSING OF SHOCK WAVES IN WATER BY DIFFERENT ELLIPSOIDAL REFLECTORS

Michael Müller

Stoßwellenlabor der RWTH Aachen, Templergraben 55, D-51 Aachen
Present address: Dornier Medizintechnik GmbH, Postfach 1128, D-8034 Germering

SUMMARY

Spherical shock waves generated by an underwater sparkgap or an explosive pellet in the first focus of different ellipsoidal segments are focused after reflection in the second focus. Shadowgraphs give an impression of the converging process whereas the field measurement is done by self-designed piezoelectric pvdf-needleprobes.

Two different series of reflectors are tested. The first is similar to spherical mirrors, the second are deep reflectors which surround the generation point. For both variations the parameters: size of reflector, focal length, reflector material and incident shock strength, show their influence on the focusing process and the location and amplitude of the maximum pressure. In the case of the shallow reflectors, which utilize only 5% of the primary shock energy, the focusing is close to the geometrical acoustic and reaches high pressure amplitudes up to 1200 bar, compared to the deep types where the higher utilized energies of 50-98% induce increased non-linear effects which lead to wider focal areas and lower focus amplitudes of only 500 bar but stronger effects on materials placed in this zone.

However for both reflector types the maximal amplitudes are proportional to the angle of aperture.

INTRODUCTION

The phenomena of focused shock waves in water have reached a world wide interest due to growing applications in the medical field [1]. Started with studies of converging shock waves in gases [2, 3] in the seventies, the research work was extended to the more complicated medium water in the eighties [1, 3, 4, 5, 6, 7, 8, 9]. Nevertheless very different results were reached, concerning pressure amplitudes, locations of maximal pressure or extensions of the focal areas, which were mainly based on an insufficient measurement technique.

By the development of piezoelectric pvdf-pressure probes [10, 11] with a high spatial and temporal resolution these uncertainties could be widely minimized, which now enable systematic studies on focusing phenomena in water.
Hence to cover nearly all possibilities of focusing spherical shock waves two different ellipsoidal reflector systems were used. The character of these systems can be transfered to the different commercial lithotripter models.

Beside the shock wave measurements shadowgraphs will give an impression of the converging field.

EXPERIMENTS

Experimental arrangement:

The experiments were made in a water basin filled with degassed water. The spherical shock wave was generated by an underwater spark discharge (U = 20 kV; C = 310 nF) with a transmission efficiency to shock waves of about η = 2% and for stronger shocks by small microexplosives of 28 mg, 59 mg and 89 mg (with about 3J/mg and η = 10 %). A single shot shadowgraph system provided the visualization of the shock front. The pressure measurement was made by the high resolving pvdf-pressure probe by Müller und Platte, which was adjusted in numerous positions in the focusing field. The technical data of these so-called "Needleprobes" were published elsewhere [10].
They have a sensitive diameter of 0.5 mm, a rise time of about 50-100 ns and a long life time. Their sensitivity is nearly constant inside an angle of incidence of

© 1990 American Institute of Physics

± 20° (-5 %) and was verified up to 320 bar. For higher pressures a constant sensitivity is assumed. Due to the uncertainty of the calibration of about ± 10% and the finite rise time, the real pressure amplitude may be up to 30% higher especially in the case of short pulse length and high pressure range.

Reflectors:

Two different arrangements of ellipsoidal reflectors were studied. First five shallow reflectors similar to spherical mirrors (Fig. 1a). The shock wave was generated in the far focus F_1. About 5% of the primary shock energy hit the reflector and were focused on a short way inside a large angle of aperture. By these arrangements the energy density on the reflector surface is comparable small and nearly homogeneous. The focusing field is very similar to that of a spherical wave generator used by various lithotripter companies.

Four reflectors were made of brass and steel for studying focusing shock waves, whereas reflector no. V was made of a foam to investigate focusing expansion waves.

The second system has deep reflectors which surround the generation point F_1 (Fig. 1b). They are similar to reflectors used in the lithotripsy by Dornier and have been made of brass. All reflectors belong to the same elliptical contour. Their size can be varied by using more or less of the concentric rings which enlarge the ellipsoidal surface. Additional a cut off of reflector no. 5 was used with a width of 60 mm to demonstrate the propagation of the incident and reflected shock wave inside the reflector.

RESULTS

Shadowgraphs:

Figure 2 shows the shadowgraphs of the focusing process of the shallow reflector no. III (a) and V (b) together with the deep reflector no. 5 (c, d) resp.. Since in the case of the shallow reflectors the shock waves are very weak, the reflection and focusing evolve according to the geometrical acoustic with a very small focal spot of only a few millimeters (a), whereas the foam reflector (b) shows in addition special effects in the focal region. Here high tension occurs, which leads to a lot of small cavitation bubbles. They collapse again a few microseconds later and generate small spherical shock waves. Their envelope can be seen as a dark ring.

For the deep ellipsoid the focusing isn't as good as for the shallow ones due to increasing non-linear effects. Even here the ellipsoids are on the left side (Figs. 2c, d). The small crossing on the right marks the geometrical focus. For the half-ellipsoid no. 5 (c) the minimal lateral extension of the focusing front is 20 mm and about 15 mm behind the geometrical focus. The converging front is followed by many small cavitation bubbles. By increasing the primary shock energy (d) using an explosive pellet of 28 mg (PETN) the number of cavitation bubbles increases and the focal area grows to 50 mm in diameter. For this case the first three exposures in fig. 2d show the reflection process inside the ellipsoid using the open reflector. The reflected wave seems to be undisturbed by any waves propagating in the brass reflector. A part of the reflected shock however hits the generated bubble in the first focus.

Pressure distribution:

Fig. 3 demonstrates the pressure history in the focusing field of the reflectors III (a) and 5 (b). The position of the shock front (——) and the diffracted expansion wave (---) coming from the reflector edge are plotted for several times. Here the shock waves were generated by a spark discharge.

The left oscillogram in the middle of fig. 3a shows the pressure profile of the incident wave without a reflector. The blast wave has an amplitude of about $\hat{p}_0$ = 11 bar, which we use as a reference pressure and a time constant of its exponential decay of about 3 µs. The upper profiles describe the pressure history on the axis of the reflector. The considerable amplification up to the focal spot which corresponds exactly with the geometrical focus is clearly demonstrated. The time constant is

shortened to less than 100 ns and the measured amplitude is 54 times that on the reflector surface, about 600 bar. The expansion wave generated at the reflector edge is recorded as a negative peak which pursues the precursing shock front. The lower oscillograms illustrate the pressure profiles normal to the reflector axis. The middle one gives the amplitudes at the focus and close by. 1 mm lateral there is left 60%, 2 mm aside is only 35% of the amplitude at the focus.

The highest amplification is reached by reflector II with a very large diameter to focal length ratio of D/f = 3 (Fig. 4). Its focus amplitude rises up to 1200 bar, more than 100 times as much as on the reflector surface. The lateral extension - its FWHM (Full-Width-Half-Maximum) - is only 1,5% of the focal length and similar for all tested shallow reflectors.

Even the foam reflector no. V focuses exactly on the geometrical focus, but its amplification is limited on -90 bar due to cavitation effects which disturb the focusing process.

In the case of the deep reflectors (Fig. 3b) we used the value of the primary shock in the center of the ellipsoid $\hat{p}_M$ as the reference pressure. For U = 20 kV its amplitude is $\hat{p}_M$ = 29 bar, the time constant is 2 µs. Even here the upper oscillograms describe the pressure history on the reflector axis. The peak pressure of about 400 bar is reached 0,8 x f behind the geometrical focus (5). Its pulse has been shortened to a time constant of only 400 ns. Due to the concentration of energy and the highest pressure on the reflector axis (8, 9, 10), here the shock velocity is bigger than on the marginal beam. This leads to a flattening of the central part and to a large focal area. 5 mm lateral to the axis there are still 65% of the axial pressure at the geometrical focus (11).

The location of the maximal pressure and its amplitude is mainly influenced by the size of reflector (Fig. 5a) and similar to the shallow typs by the angle of convergency. Fig. 6 shows the direct proportionality between the maximal pressure and the angle of aperture for both typs. In the center (M) of the ellipsoidal contur at x/f = -4 all tested reflectors reach nearly the same amplification of 7,5 x $\hat{p}_M$. Nine times this value corresponds to the geometrical acoustic. For small reflectors (1 u. 2) the non-linear effects on the axis dominate and finish the focusing process far in front of the geometrical focus. The larger typs however have wide marginal shock areas where non-linear effects are neglectable. Together with these regions the focus is shifted away from the reflector closer to the geometrical point and further on.

The maximum amplitude of 500 bar is reached with refl. no. 6 at x/f = 0,3. Similar pressure amplitudes were measured at a Dornier lithotripter by Coleman and Saunders [12], using a pvdf-membrane hydrophone.

Even an increase in primary shock energy brings hardly a higher focal pressure than an extension in the focal area together with a small shift of the maximum away from the reflector as a matter of growing non-linear effects (Fig. 5b). Using reflector no. 5 and a primary shock pressure of $\hat{p}_M$ = 124 bar the maximal amplification is only 4.5 compared to 20 with a shock strength of $\hat{p}_M$ = 13 bar. Fig. 5c illustrates for the different sizes of the reflectors the increase in focal diameter with increasing primary shock strength. Only the reflector no. 6 has a quite sharp focus because here the marginal and nearly linear propagating shock front areas of the reflected shock prevailed.

Although the pressure amplitudes reached with the shallow reflectors are much higher, the bigger energy content at the focus using the deep reflectors brings much more desintegration effects on materials placed in the focal area. This means, that ellipsoids for lithotripsy should be deep ones with a large aperture to minimize the energy density in the shock wave field out of the focus and hereby any tissue damage by utilizing simultaneously a maximum of energy, which leads to sufficient pressure amplitudes at the focus for fracturing kidney- or gallstones.

ACKNOWLEDGEMENT

This study is part of a thesis [13] supported by the Deutsche Forschungsgemeinschaft through Sonderforschungsbereich 27 "Wellenfokussierung". I like to thank Prof. Dr. H. Grönig for his encouragement and his support to this work.

REFERENCES

[1] Chaussy, Ch., Forßmann, B., Brendel, W., Jocham, D., Eisenberger, F., Hepp, W. und Gokel, J.M.: Berührungsfreie Nierensteinzertrümmerung durch extrakorporal erzeugte, fokussierte Stoßwellen. Beiträge zur Urologie, Bd. 2, München, Karger-Verlag 1980.

[2] Sturtevant, B. and Kulkarny, V.A.: The Focusing of Weak Shock Waves. J. Fluid Mech. 73 (1976), 651-671.

[3] Holl, R.: Wellenfokussierung in Fluiden. Dissertation, RWTH Aachen (1982).

[4] Takayama, K., Esashi, H. and Sanada, N.: Propagation and Focusing of Spherical Shock Waves Produced by Underwater Microexplosions. R.D. Archer and B.E. Milton (Eds.): Proc. of the 14th Int. Symp. on Shock Tubes and Waves, Sydney (1983).

[5] Russell, D.A.: Shock Dynamics of Non-Invasive Fracturing of Kidney Stones. D. Bershader (Ed.): Proc. of the 15th Int. Symp. on Shock Waves and Shock Tubes, Berkeley (1985).

[6] Müller, M.: Experimental Investigations on Focusing of Weak Spherical Shock Waves in Water by Shallow Ellipsoidal Reflectors. Acustica 64 (1987), 85-93.

[7] Grünewald, M., Koch, H., Hermeking, H.: Modelling of Shock Wave Propagation and Tissue Interaction During Extracorporeal Shock Wave Lithotripsy Grönig, H. (Ed.): Proc. of the 16th Int. Symp. on Shock Tubes and Waves, Aachen (1987).

[8] Kitayama, O., Ise, H., Sato, T., Takayama, K.: Non-Invasive Gallstone Disintegration by Underwater Shock Wave Focusing. Grönig, H. (Ed.): Proc. of the 16th Symp. on Shock Tubes and Waves, Aachen (1987).

[9] Murate, S., Watanabe, H., Takahashi, T., Watanabe, K. and Oinuma, S.: Studies on the Application of Microexplosion to Medicine and Biology, II. Construction and Strength of Urinary Calculi. Jap. J. Urol. 68 (1977), 249.

[10] Müller, M. und Platte, M.: Einsatz einer breitbandigen Piezodrucksonde auf PVDF-Basis zur Untersuchung konvergierender Stoßwellen in Wasser. Acustica 58 (1985), 215-222.

[11] Bacon, D.R.: Characteristics of a PVDF-membrane Hydrophone for Use in the Range of 1-100 MHz IEEE, Trans. Sonics. Ultrason., SU-29 (1982), 18

[12] Coleman, A.J., Saunders, J.E.: Comparison of Extracorporeal Shock Wave Lithotripters. Lithotripsy II, Chapt VIII. Edited by M.J. Coptcoat et al., Bd. I, London, Publishing, 1987.

[13] Müller, M.: Stoßwellenfokussierung in Wasser. Dissertation, RWTH Aachen (1987).

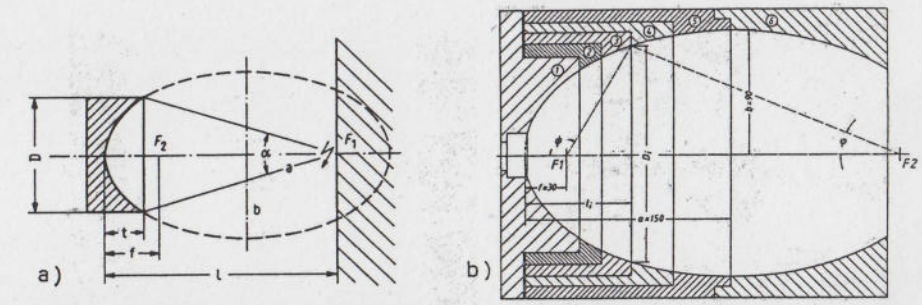

reflector	material	R=H₂O	a	b	c	l	t	α	f	D	D/f
I	brass	0,92	60,0	56,6	20,0	80,0	17,6	65,3°	40,0	80,0	2,0
II	brass	0,92	211,9	152,7	146,9	358,8	48,8	34,9°	65,0	195,0	3,0
III	steel	0,94	244,4	216,0	114,4	358,8	26,3	32,7°	130,0	195,0	1,5
IV	steel	0,94	244,4	216,0	114,4	358,8	48,2	45,5°	130,0	260,0	2,0
V	foam of pu	-0,97	244,4	216,0	114,4	358,8	26,3	32,7°	130,0	195,0	1,5

reflector	1	2	3	4	5	6
t	41,0	56,0	78,0	109,0	150,0	260,4
D	122,4	140,1	157,8	172,9	180,0	124,0
ψ	100,2°	110,4°	121,3°	132,4°	143,1°	164,9°
φ	15,0°	18,1°	22,3°	28,2°	36,9°	81,2°
A_M/A_K	0,59	0,67	0,76	0,84	0,90	0,98

Fig. 1: Data of the shallow (a) and deep reflectors (b)

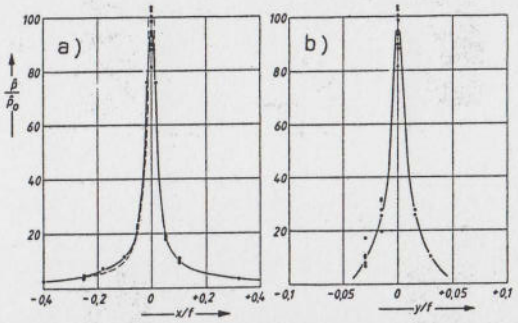

Fig. 4: Shallow reflector II; $\hat{p}_o$ = 11 bar
a) Pressure on the reflector axis,
b) Lateral extension at the geom. focus

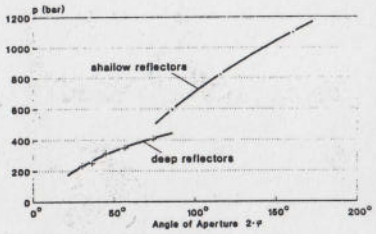

Fig. 6: Maximal pressure at the focus versus the angle of aperture

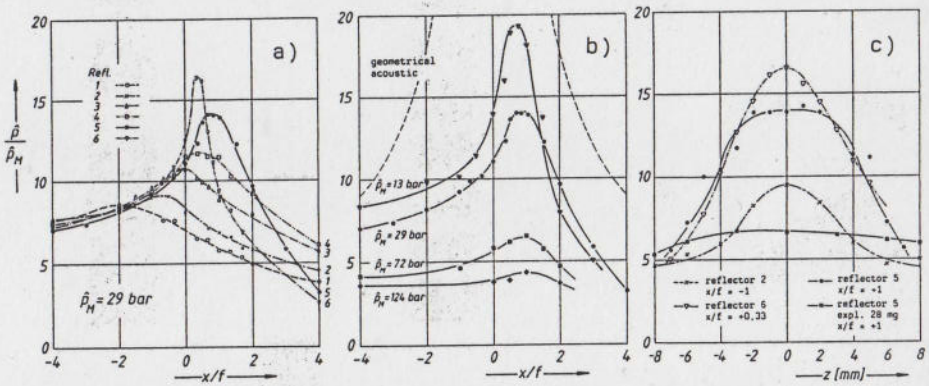

Fig. 5: Deep reflectors. a) Pressure distribution on the axis of symmetry; b) Decreasing focusing with increasing primary shock strength (refl. 5); c) Lateral pressure extension at the focus

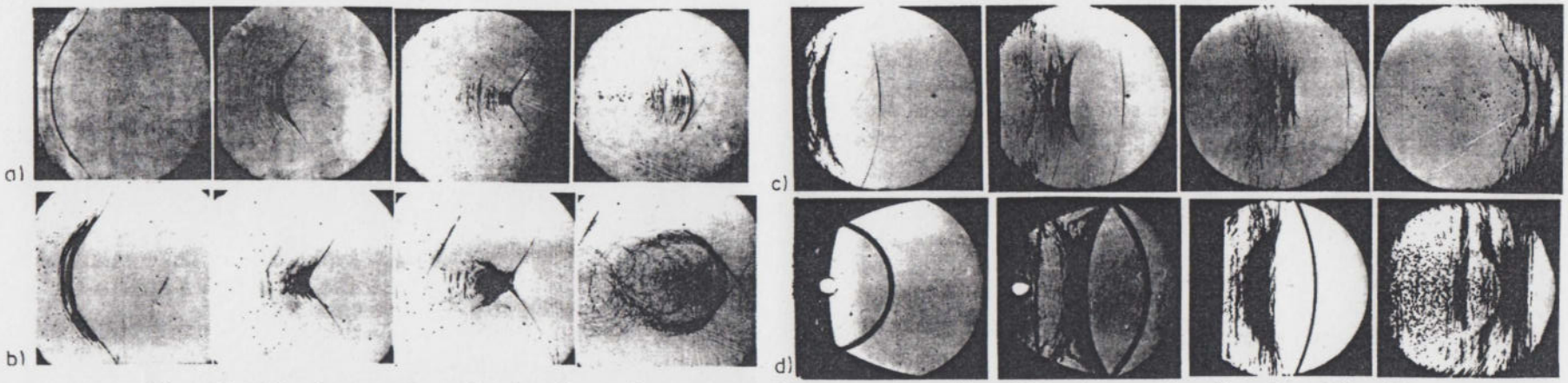

Fig. 2: Shadowgraphs of the focusing wave front. a) refl. III, b) refl. V, c) refl. 5, d) refl. 5 open typ and no. 5 with explosive pellet

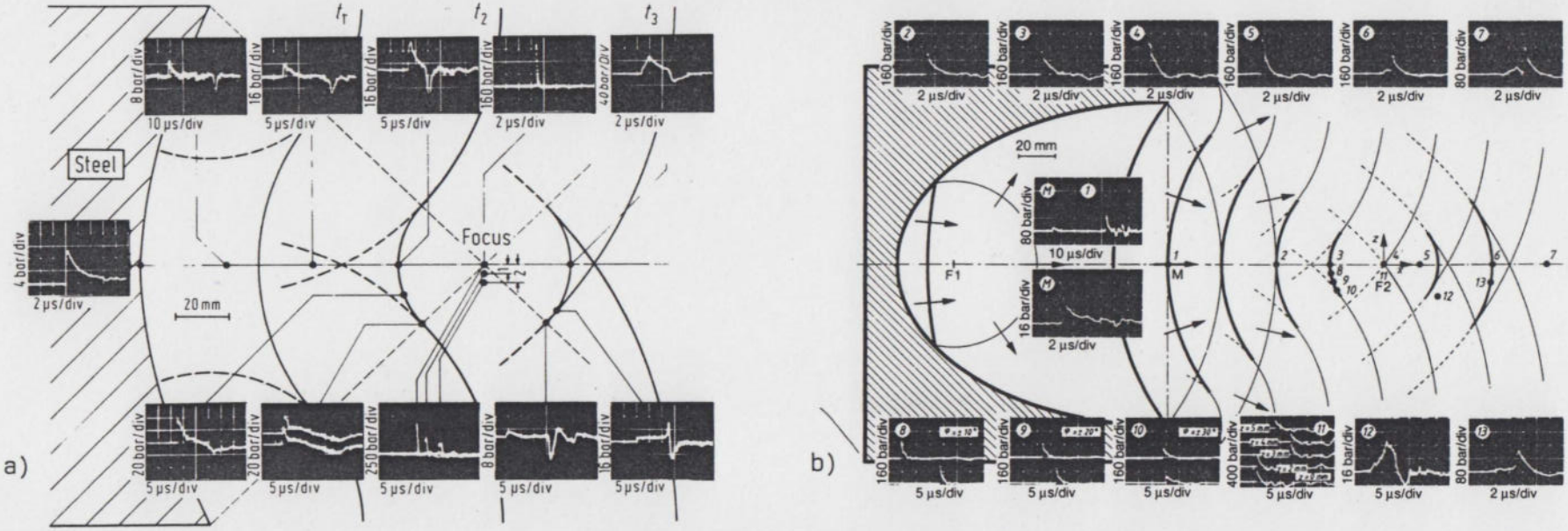

Fig. 3: Pressure distribution in the focusing field of reflector III (a) and reflector 5 (b); U = 20 kV